# Li-Ion Charger, Single 18650 Cell

## Revision A


## Chris Hii
## http://www.chrishii.ca


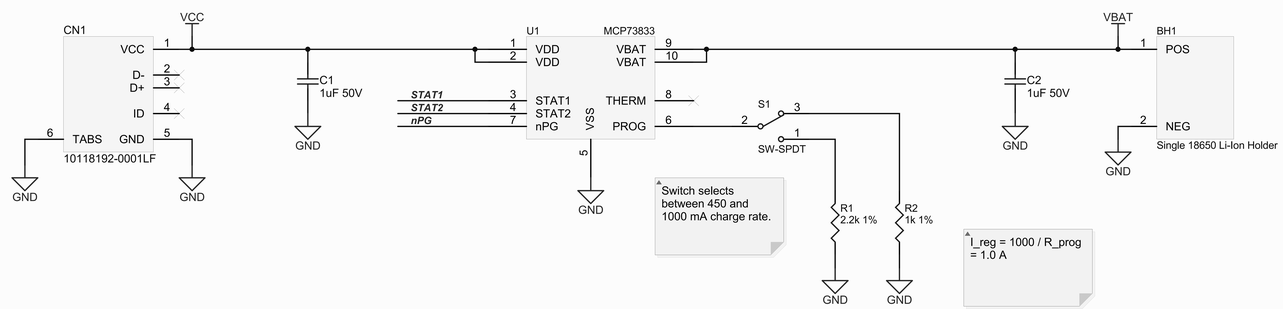


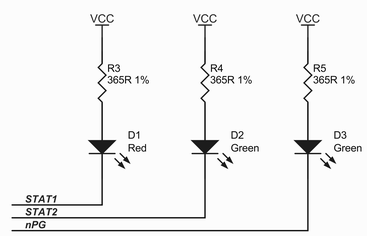


**TABLE 5-1: STATUS OUTPUTS**

| Charge Cycle State | STAT1 | STAT2 | PG |
|---|---|---|---|
| Shutdown | Hi-Z | Hi-Z | Hi-Z |
| Standby | Hi-Z | Hi-Z | L |
| Charge in Progress | L | Hi-Z | L |
| Charge Complete (EOC) | Hi-Z | L | L |
| Temperature Fault | Hi-Z | Hi-Z | L |
| Timer Fault | Hi-Z | Hi-Z | L |
| System Test Mode | L | L | L |

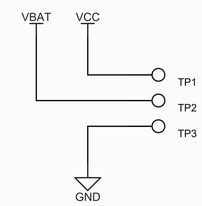


| Title | | |
|---|---|---|
| Size A | Number | Revision |
| Date: 8/17/2014 | Sheet of | |
| File: D:\svn\..\main.SchDoc | Drawn By: Chris Hii | |